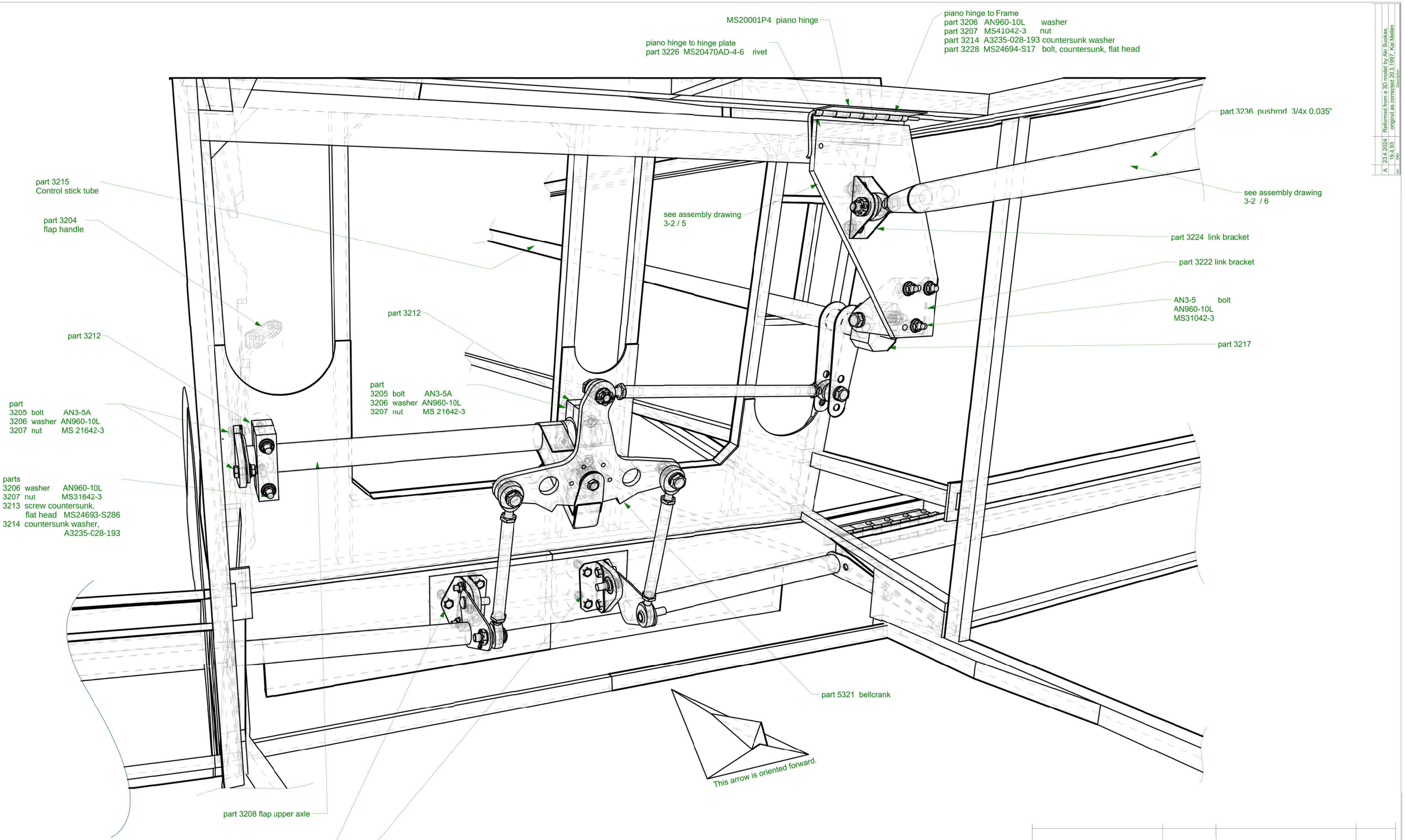

rev	date	Description
A	23.4.2024	Reformed from a 3D model by Aki Suokas.
	15.4.93	original as corrected 20.3.1997, Kai Mellen

Description	part nr	material	quantity

print size	date created	part of
A3	23.4.2024	2-1

Joystick mechanism

		revision	Drawing nr	sheet of
PIK-26	Distribution: osk HTH, Finland www.hooteehoo.org	A	3-1	1 (4)